Suction connecting

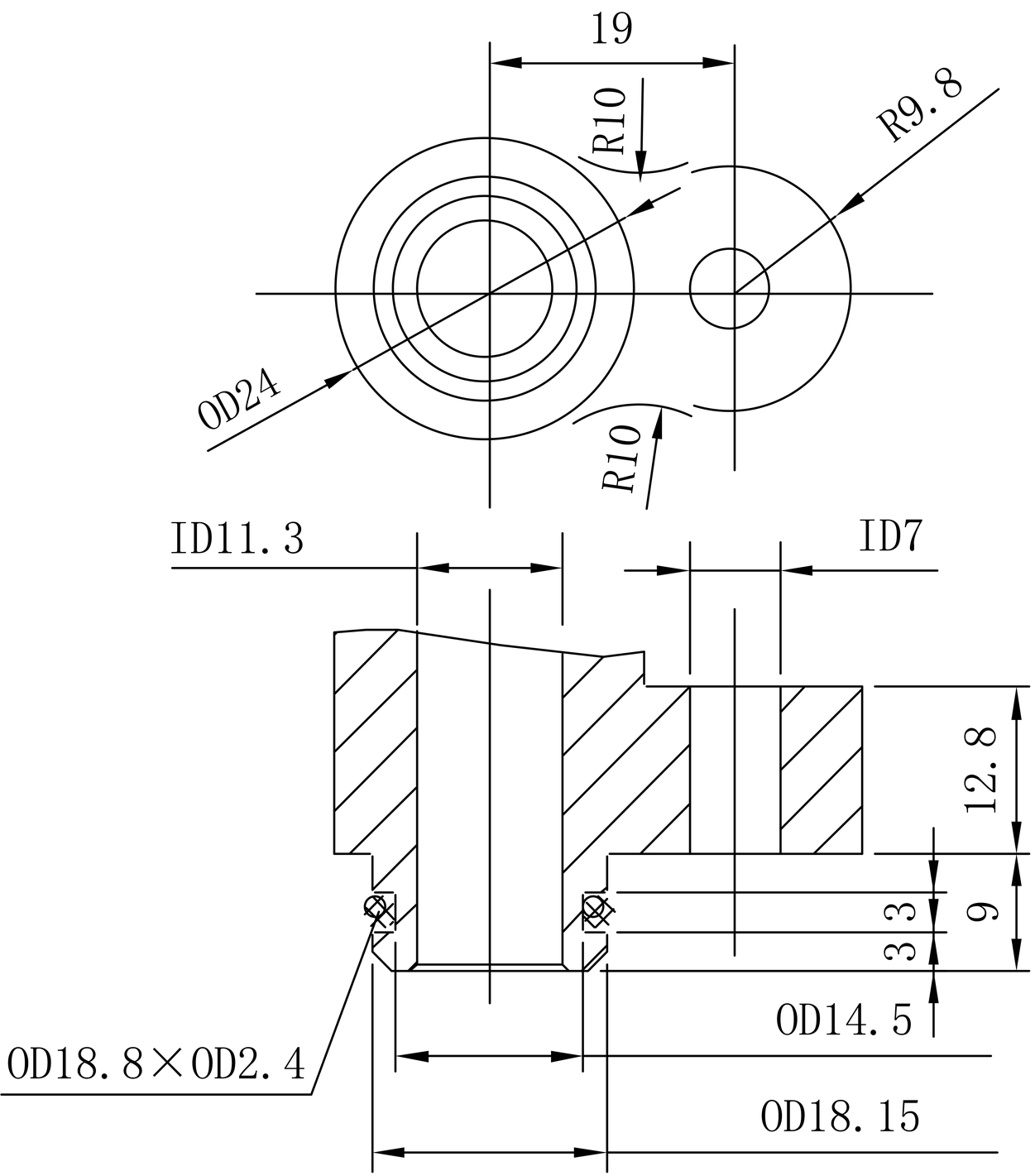
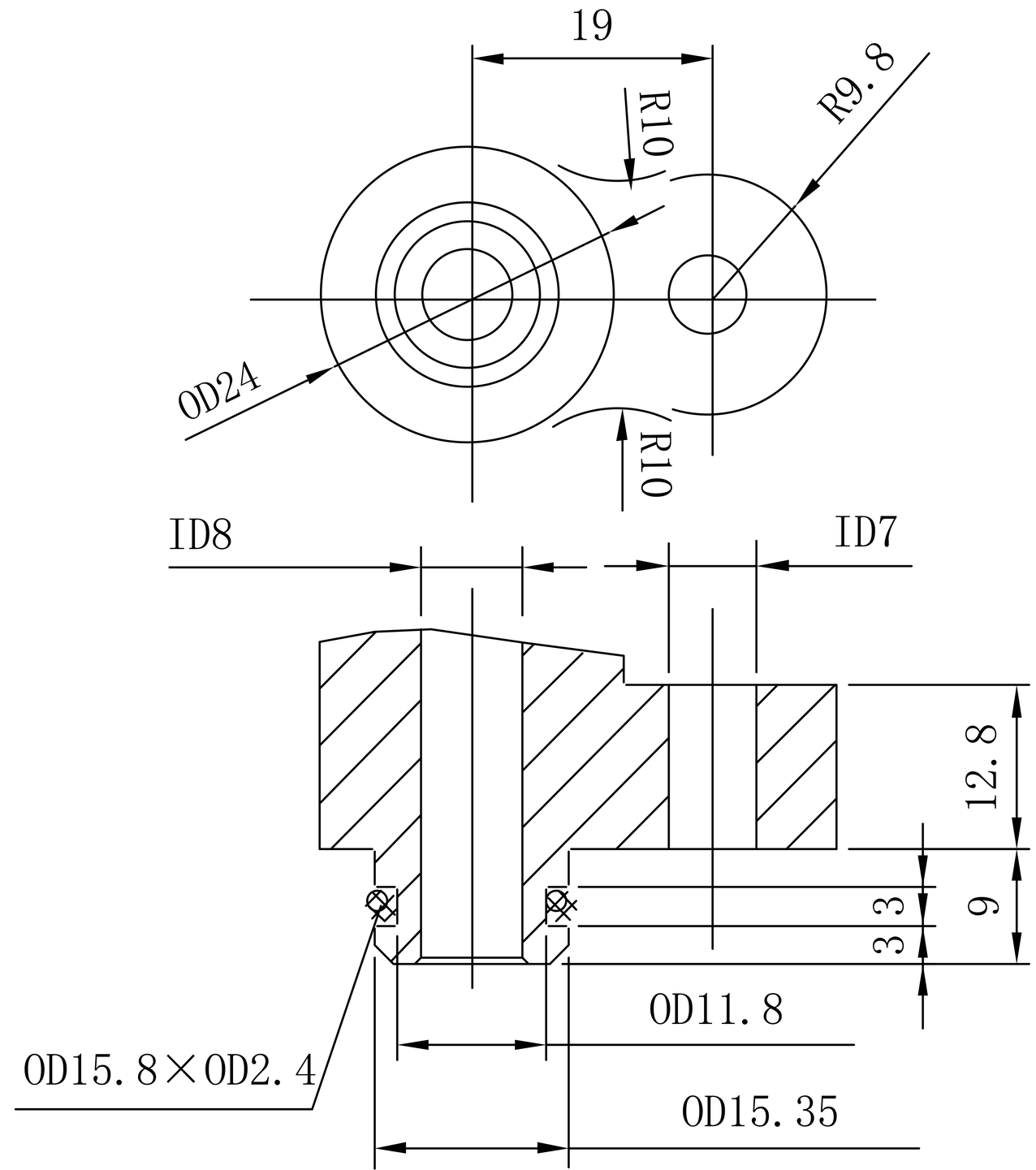
Discharge connecting